Aztec International S.A.
Sowia 13 C, 62-080
Tarnowo Podgórne, Poland
Phone +48 61 867 60 84
Fax: +48 61 867 34 44
NIP/VAT EU PL7871922976
sales@aztec-international.eu
www.aztec-international.eu
www.master-flash.eu

# Master Flash® Solar Multi Port Aluminium

## 1.1 Master Flash® Solar Multi Port Aluminium – Technical Data Sheet

- Master Flash® Solar Multi Port Aluminium is made of EPDM rubber (ethylene propylene diene monomer) or silicone rubber.
- The base of the flashings is made of aluminium which allows easy shaping to fit the roofing profile.
- One design with multiple functions. Suitable for small format roofing types such as tar paper shingles, cement tiles or ceramic tiles.
- Applicable with photovoltaic solar panels.
- Roof flashings are intended for watertight sealing around installation elements / ducts penetrating the roof slope (i.e. ventilation pipes, solar ducts, chimney flues, electric cables and wires or other elements passing through the roof slope).
- Roof flashings can be used on various types of metal roofs including profiled metal tiles, metal flat sheets, metal trapezoidal sheets.

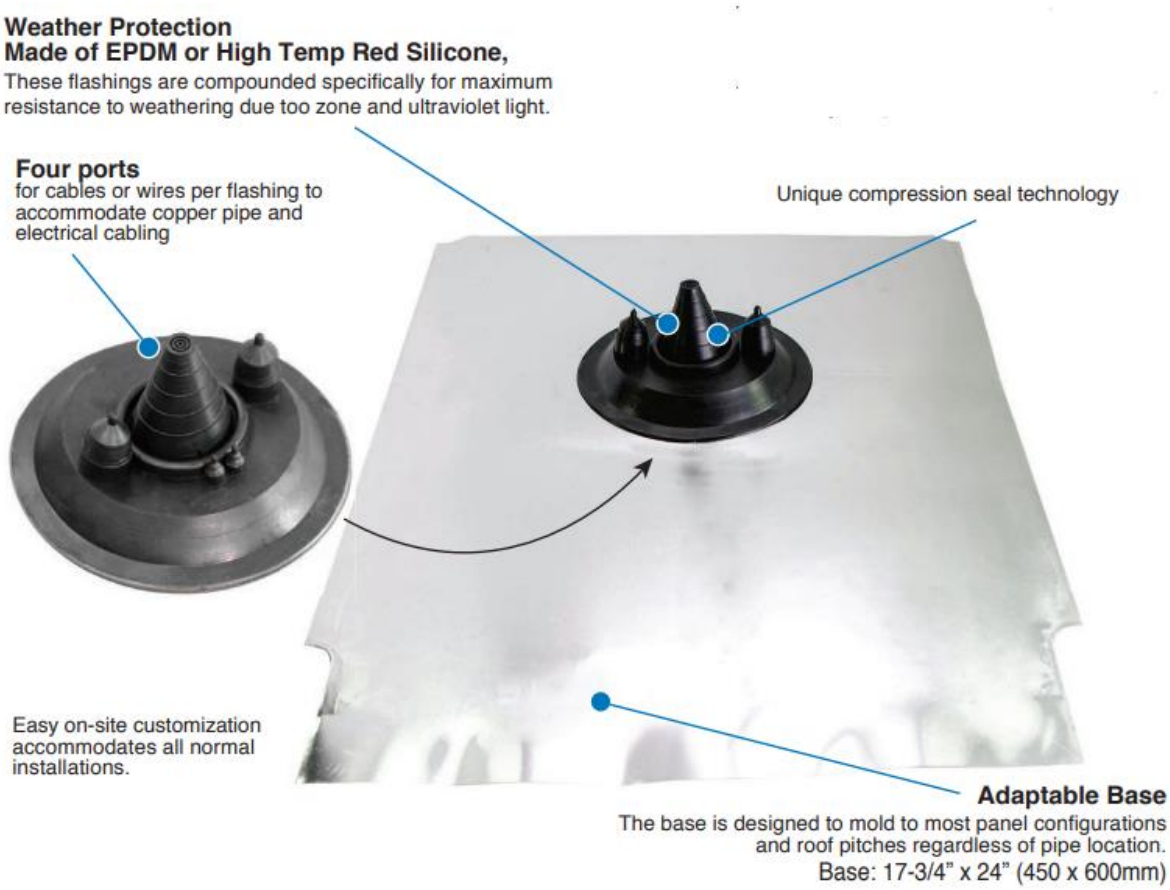

Aztec International S.A.
Sowia 13 C, 62-080
Tarnowo Podgórne, Poland
Phone +48 61 867 60 84
Fax: +48 61 867 34 44
NIP/VAT EU PL7871922976
sales@aztec-international.eu
www.aztec-international.eu
www.master-flash.eu

# 1.2 Master Flash® Solar Multi Port Aluminium – Material Specification and Sizes

| Master Flash® | | EPDM 500 | Silicone |
|---|---|---|---|
| ADVANCED OZONE RESISTANCE tested to: | | 70 h @ 500 pphm | 70 h @ 500 pphm |
| HIGH TEMPERATURE RESISTANCE | | | |
| tested to: | intermittent | +135°C (+275°F) | +260°C (+500°F) |
| | continuous | +100°C (+212°F) | +225°C (+437°F) |
| LOW TEMPERATURE RESISTANCE tested to: | | -55°C (-67°F) | -74°C (-101°F) |
| TENSILE SET maximum | | 10 MPa (1450 psi) | 5 MPa (725 psi) |
| COMPRESSION SET maximum | | 25% | 50% |

Aztec International S.A.
Sowia 13 C, 62-080
Tarnowo Podgórne, Poland
Phone +48 61 867 60 84
Fax: +48 61 867 34 44
NIP/VAT EU PL7871922976
sales@aztec-international.eu
www.aztec-international.eu
www.master-flash.eu

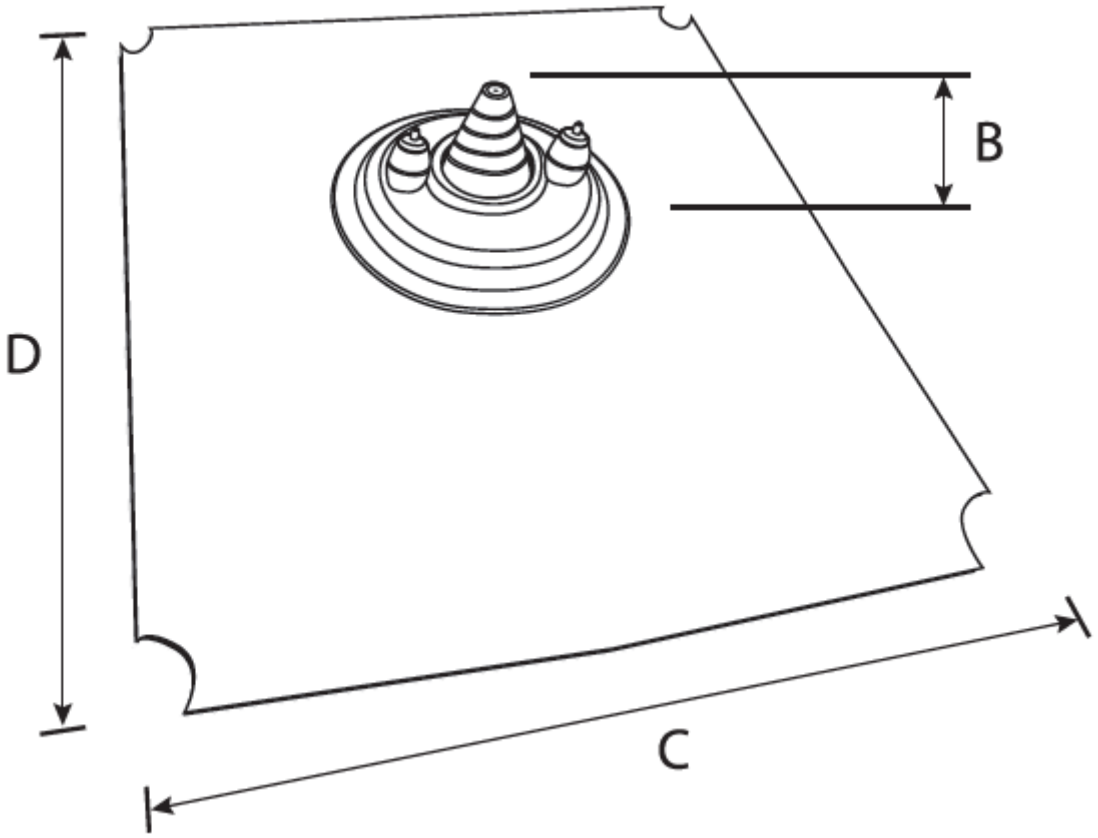


**Master Flash® Solar Multi Port Aluminium**

| No. | Pipe Range | Material | Black EPDM Catalogue Number | Top Opening Diameter | B-Overall Height | C x D-Base Dimensions |
|---|---|---|---|---|---|---|
| 1 | One port 0" - 1 - 15/16" (0 - 49 mm)<br>Two ports 1/64" - 3/8" (1 - 9 mm)<br>Two ports 3/16" - 15/16" (4 - 23 mm) | Black EPDM, Silicone | SMP-RS101BA | Closed | 2 - 1/2" (63 mm) | 17 - 3/4" x 24" (450 x 600 mm) |

Aztec International S.A.
Sowia 13 C, 62-080
Tarnowo Podgórne, Poland
Phone +48 61 867 60 84
Fax: +48 61 867 34 44
NIP/VAT EU PL7871922976
sales@aztec-international.eu
www.aztec-international.eu
www.master-flash.eu

# COMPOUND AND SPECIFICATION DATA FOR MASTER FLASH® BLACK EPDM

## TYPICAL PHYSICAL PROPERTIES OF MF EPDM
## ASTM D2000 M3BA510 A14, B13, C12, F17, Z1, Z2, Z3, Z4, Z5.

| PROPERTY | | VALUE | TEST METHOD |
|---|---|---|---|
| BASE MATERIAL | | CROSS LINKED EPDM<br>ETHYLENE PROPYLENE DIENE<br>TERPOLYMER | N/A |
| COLOR | | BLACK | N/A |
| TEST LEVEL | | 3 | GRADE |
| TEST TEMPERATURE | | B 100° C | GRADE |
| VOLUME SWELL | | NO REQUIREMENT | CLASS |
| DUROMETER | | 50 (SHORE) | ASTM D 2240 |
| TENSILE STRENGHT | | 10 MPA (1450 psi) MINIMUM | ASTM D 412 |
| A14 | HEAT AGING | 70 hrs. @ 100° C<br>Change in hardness Max +10 pts<br>Change in tensile Max -25 %<br>Change in ultimate elong. Max -25% | ASTM D 573 |
| B13 | COMPRESSION SET | 22 hrs. @ 70 ° C MAX 25 % | ASTM D 395 B |
| C12 | OZONE RESISTANCE | 70 hrs. @ 50 pphm | ASTM D 1171 |
| F17 | LOW TEMPERATURE BRITTLENESS | 3 MINUTES @ -40° C PASS | ASTM D 2137A, 9.3.2 |
| Z1 | TARGET HARDNESS | 55 +/-5 SHORE A | ASTM 2240 |
| Z2 | SPECIFIC RUBBER | EPDM | PASS |
| Z3 | HORIZONTAL FLAME RESISTANCE | NOT TO EXCEED 3 IN/ MINUTE | ASTM 2240 |

Aztec International S.A.
Sowia 13 C, 62-080
Tarnowo Podgórne, Poland
Phone +48 61 867 60 84
Fax: +48 61 867 34 44
NIP/VAT EU PL7871922976
sales@aztec-international.eu
www.aztec-international.eu
www.master-flash.eu

# COMPOUND AND SPECIFICATION DATA FOR MASTER FLASH® SILICONE

## TYPICAL PHYSICAL PROPERTIES OF MF SILICONE
## ASTM D2000 M4 GE 505 A19, B37, C12, F19, Z1, Z2, Z3, Z4, Z5, Z6, Z7.

| PROPERTY | | VALUE | TEST METHOD |
|---|---|---|---|
| BASE MATERIAL | | SILICONE | N/A |
| COLOR | | TERRA COTTA/GRAY | N/A |
| TEST LEVEL | | 4 | GRADE |
| TEST TEMPERATURE | | 225° C | GRADE |
| VOLUME SWELL | | MAX 80% | CLASS |
| DUROMETER | | 50 (SHORE) | ASTM D 2240 |
| TENSILE STRENGHT | | 5 MPA (725 psi) MINIMUM | ASTM D 412 |
| ULTIMATE ELONGATION | | 250 % MINIMUM | ASTM 412 |
| A19 | HEAT AGING | 70 hrs. @ 225 C<br>Change in hardness Max +10 pts<br>Change in tensile Max -25 %<br>Change in ultimate elong. Max -30% | ASTM D 573 |
| B37 | COMPRESSION SET | 22 hrs. @ 175° C MAX 25% | ASTM D 395 B |
| C12 | OZONE RESISTANCE | 70 hrs. @ 50 pphm 38° C 100% quality retention | ASTM D 1171 |
| F19 | LOW TEMPERATURE BRITTLENESS | 3 MINUTES @ -55° C (-67° F) | ASTM D 2137A, 9.3.2 |
| Z1 | TARGET HARDNESS | 55 SHORE A | ASTM 2240 |
| Z2 | SPECIFIC RUBBER | SILICONE | N/A |
| Z3 | HORIZONTAL FLAME RESISTANCE | NOT TO EXCEED 3 IN/ MINUTE | UL-94 |